WEST Core Servers

WEST CONFIG

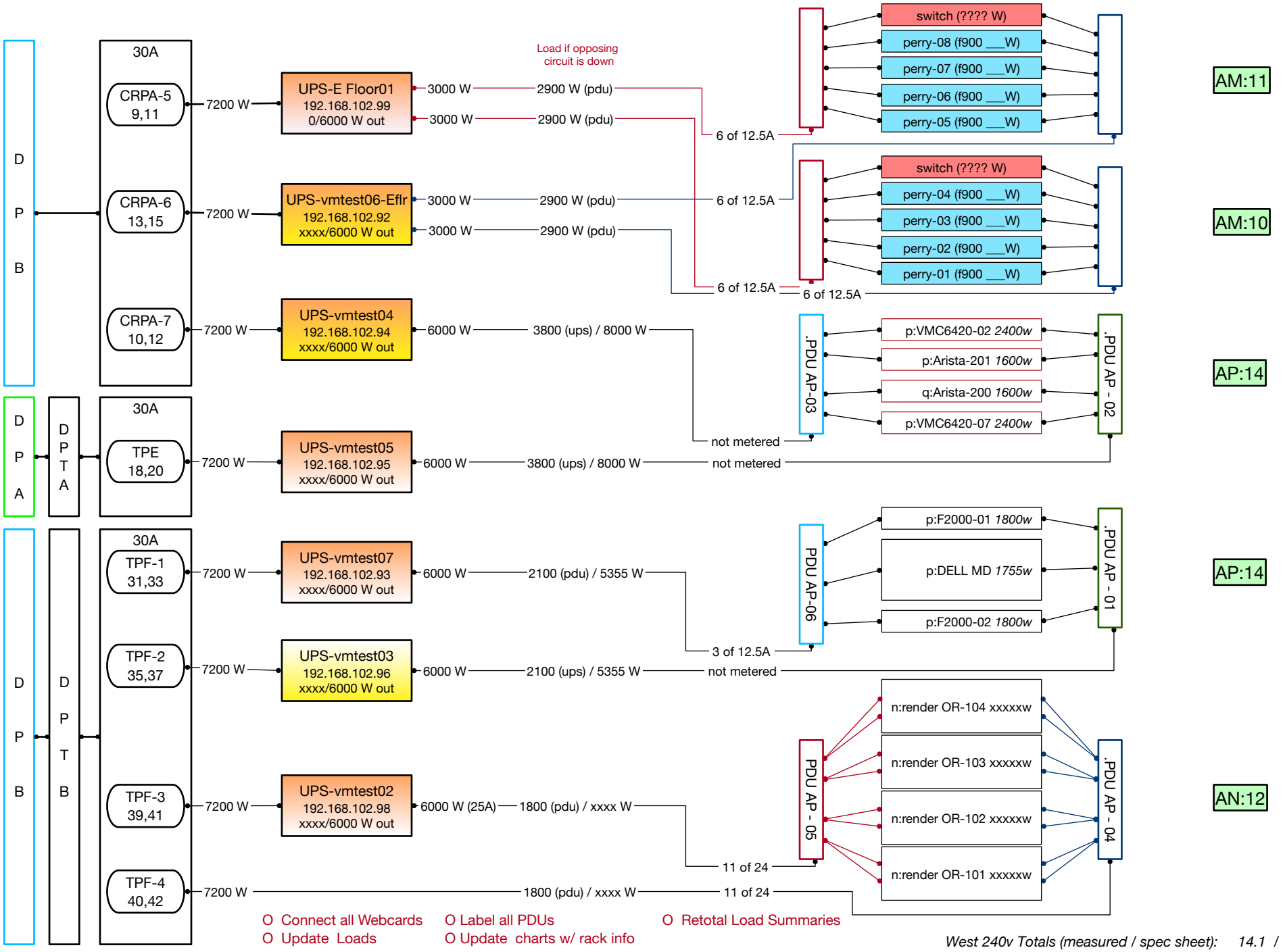

O Connect all Webcards
O Update Loads
O Label all PDUs
O Update charts w/ rack info
O Retotal Load Summaries

West 240v Totals (measured / spec sheet): 14.1 / 23.6 kW